SEIKO OPTICAL AVENIR CCTV LENS

Email:sales@seiko-optic.com

Low Magnification NIR Non-STANDARD Telecentric Lens for 1.1"

Model	Spectrum (nm)	Light Type	Sensor Type	Magni-fication	Mag	W.D.	F.NO	Numerical Aperture	Telece-ntricity	TV Distortion	Depth Of Field(mm)	Object Resolution	TTL (mm)	Mount	2/3" FOV (D×H×V)	1" FOV (D×H×V)	1.1" FOV (D×H×V)	Dimensions (mm)	Weight (g)
SNT11IR01W320C-I	400-1250 High	Non-Coaxial	1.1"	0.1X	0.1	320	4.4-22	0.011	<0.05°	<0.05%	27.720	30.5um	423	C	/	/	176×141.8×103.7	φ220×405.5	/
SNT11IR034W200C-I	400-1250 High	Non-Coaxial	1.1"	0.345X	0.345	200	8.2	0.021	<0.07°	<0.05%	4.170	15.98um	194.4	C	/	/	50.8×41.1×30	φ77×176.9	/
SNT11IR042W355C-I	400-1250 High	Non-Coaxial	1.1"	0.421X	0.421	355	6.0-40	0.035	<0.05°	<0.05%	2.020	9.59um	219.1	C	/	/	43.2×30.4×30.4	φ84×201.63	/

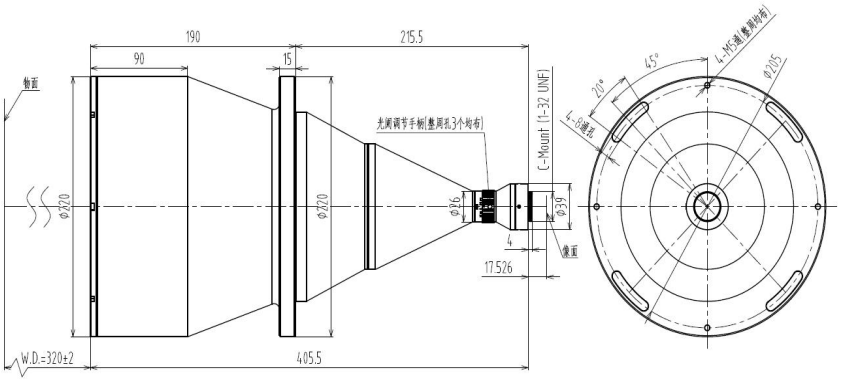

SNT11IR01W320C-I

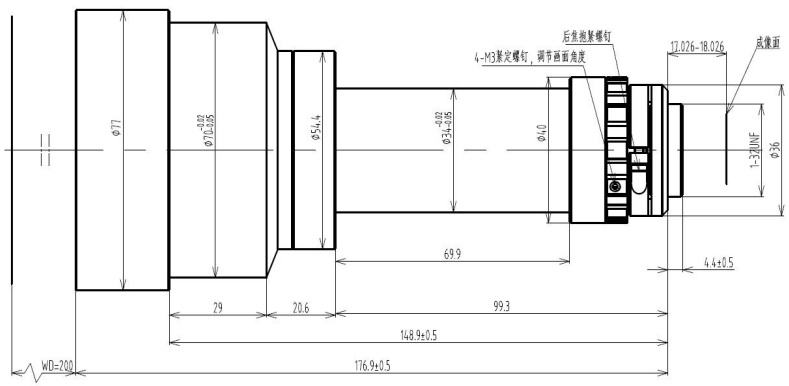

SNT11IR034W200C-I

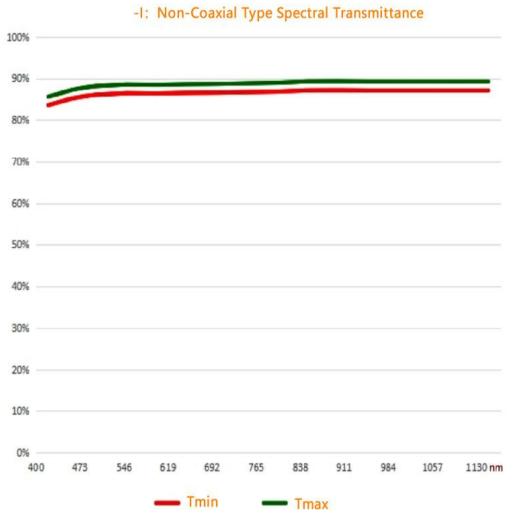

Unit：mm

TOLERANCE :
LINEARITY TOLERANCES: ±0.05
ANGULAR TOLERANCES ARE: ±30'
DRAFT ANGLES AREA: ±0.5°/SIDE

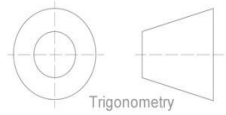

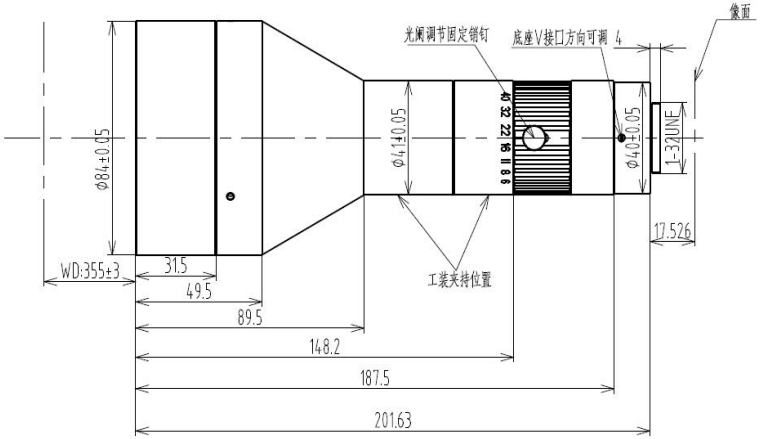

SNT11IR042W355C-I